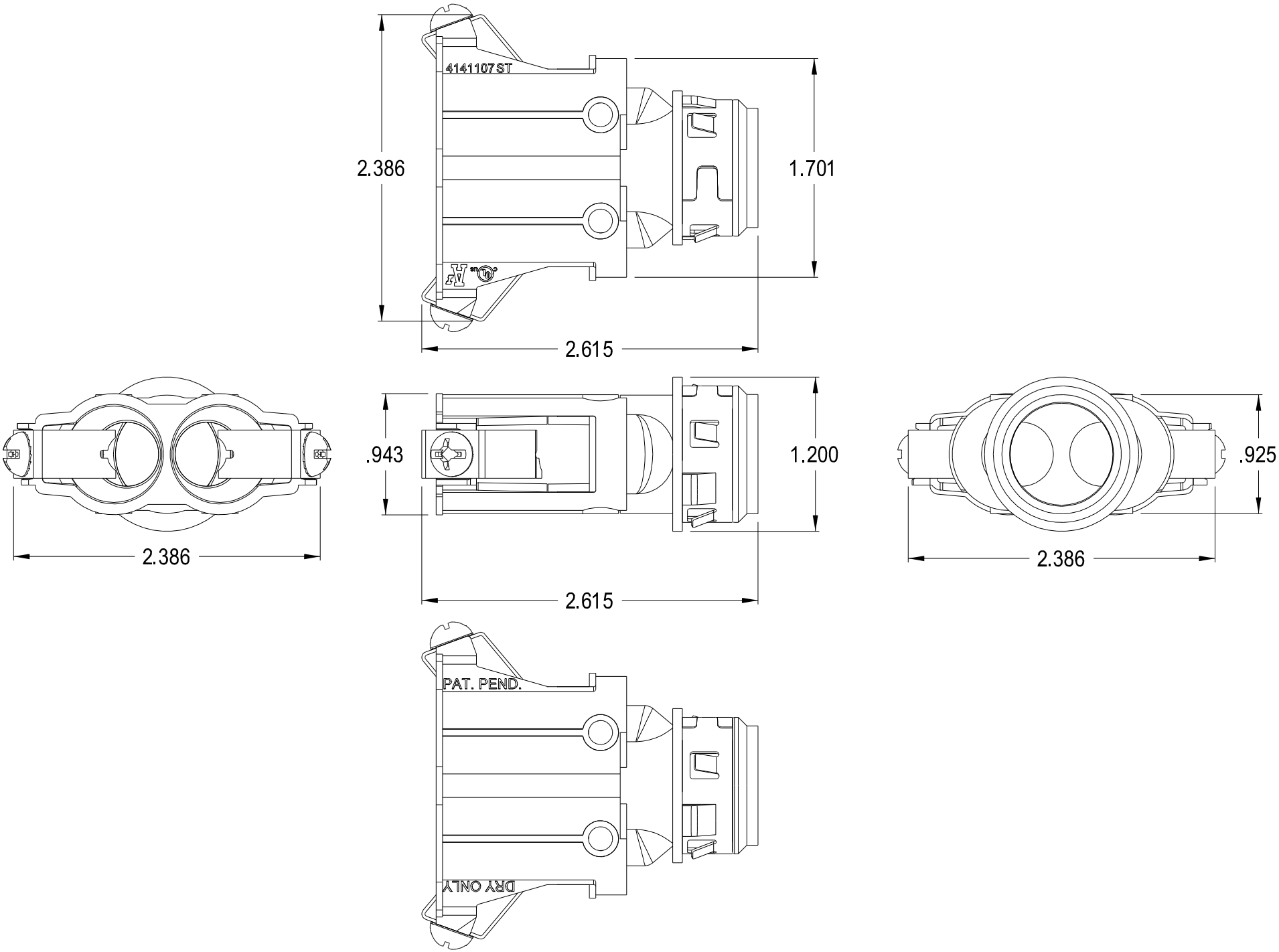
4141107ST
2.386
1.701
2.615
.943
1.200
2.386
.925
2.386
2.615
PAT. PEND.
DRY ONLY