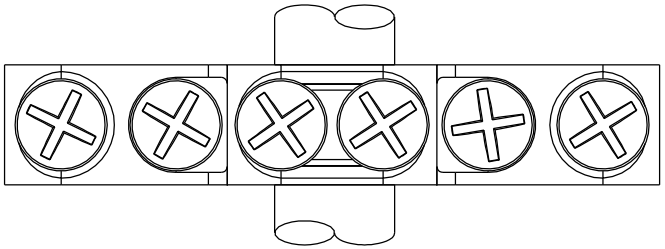

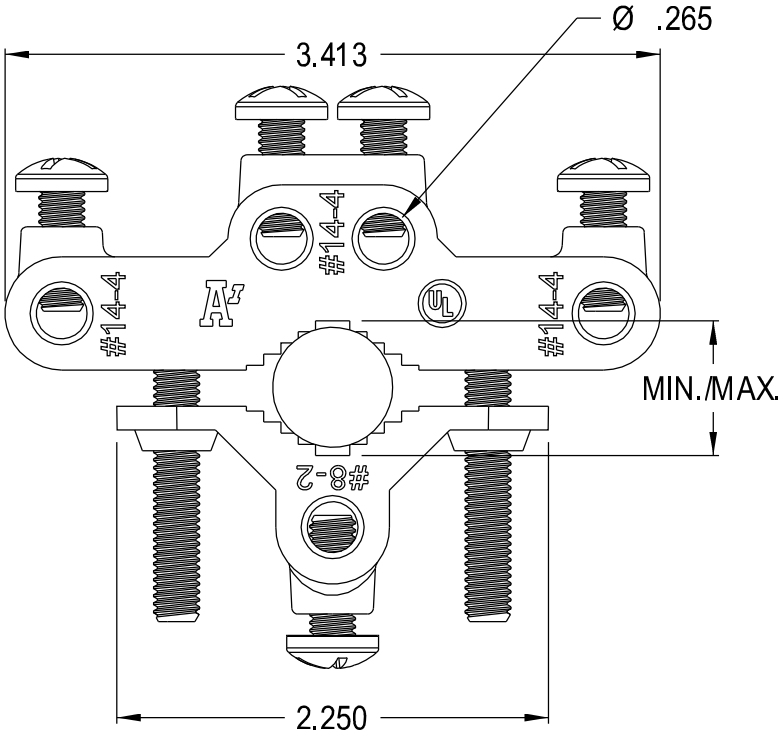
Ø .265
3.413
#14-4
#14-4
#14-4
#8-2
MIN./MAX.
2.250

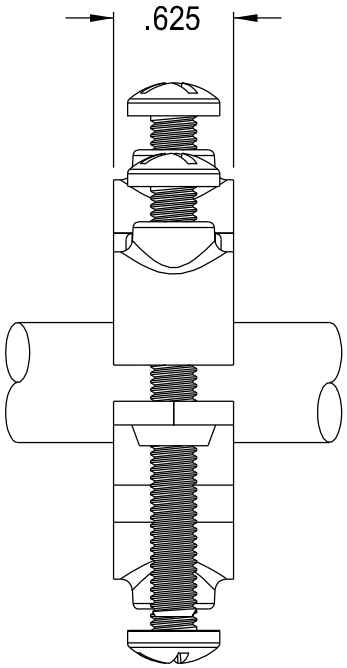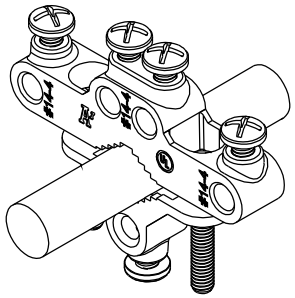
.625