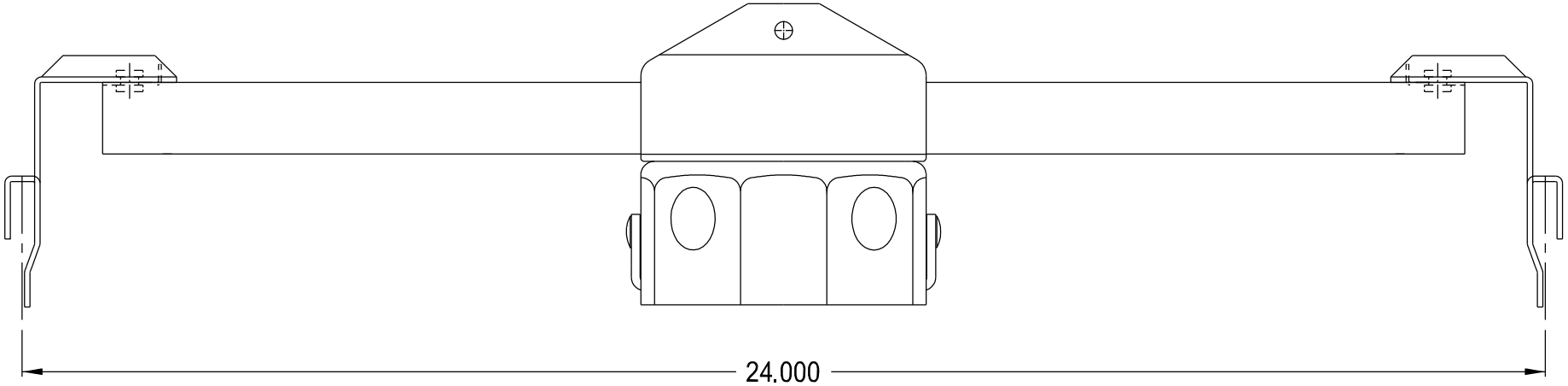

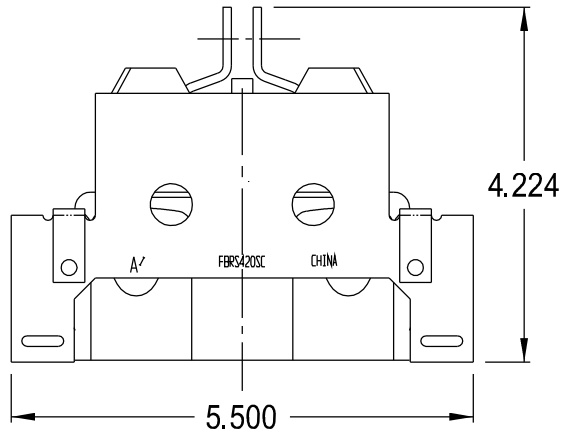

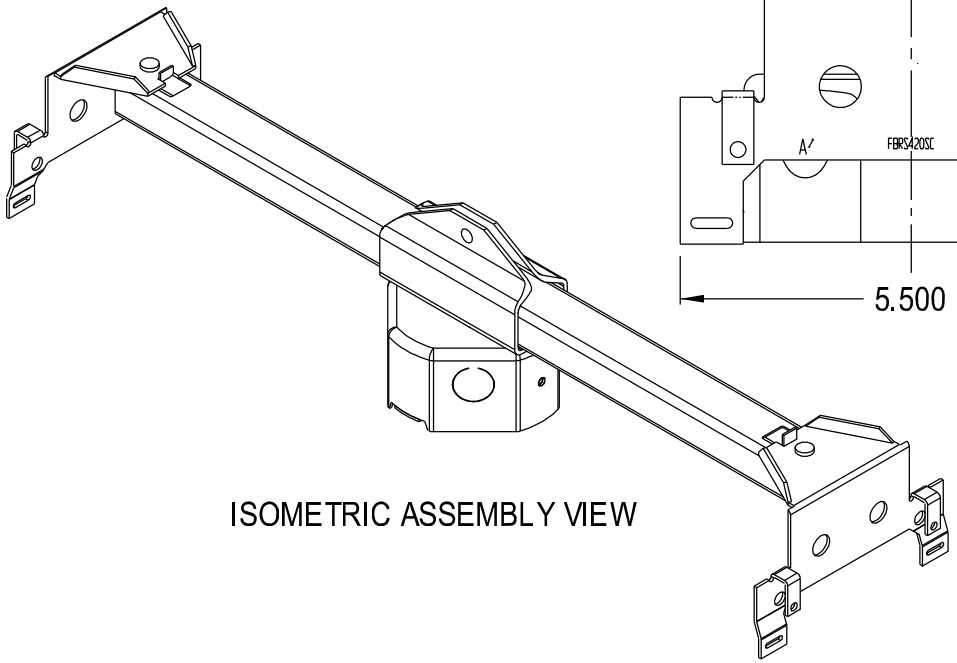

ISOMETRIC ASSEMBLY VIEW