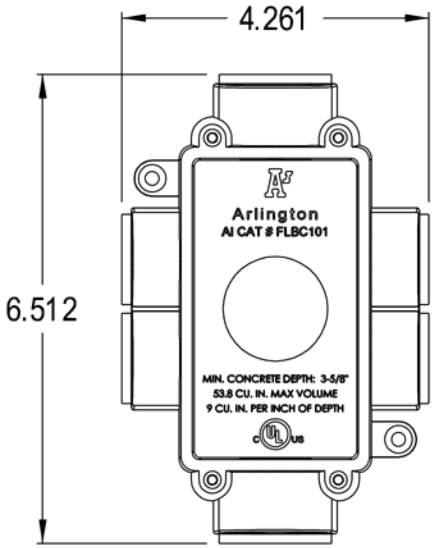
4.261
6.512
Arlington
AI CAT # FLBC101
MIN. CONCRETE DEPTH: 3-5/8"
53.8 CU. IN. MAX VOLUME
9 CU. IN. PER INCH OF DEPTH

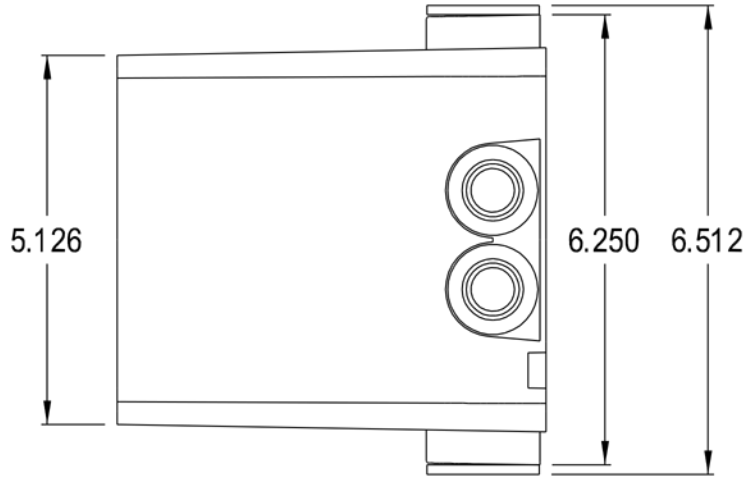
5.126
6.250
6.512

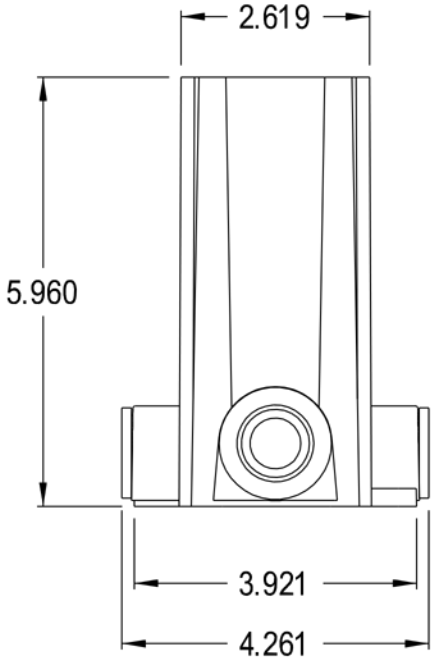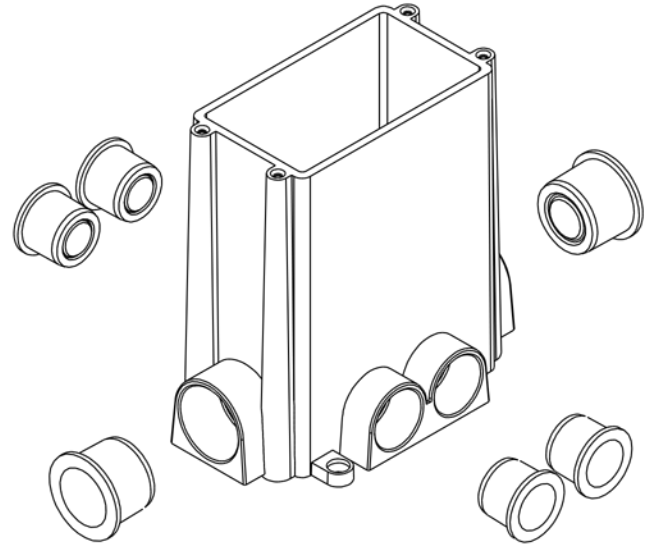
2.619
5.960
3.921
4.261