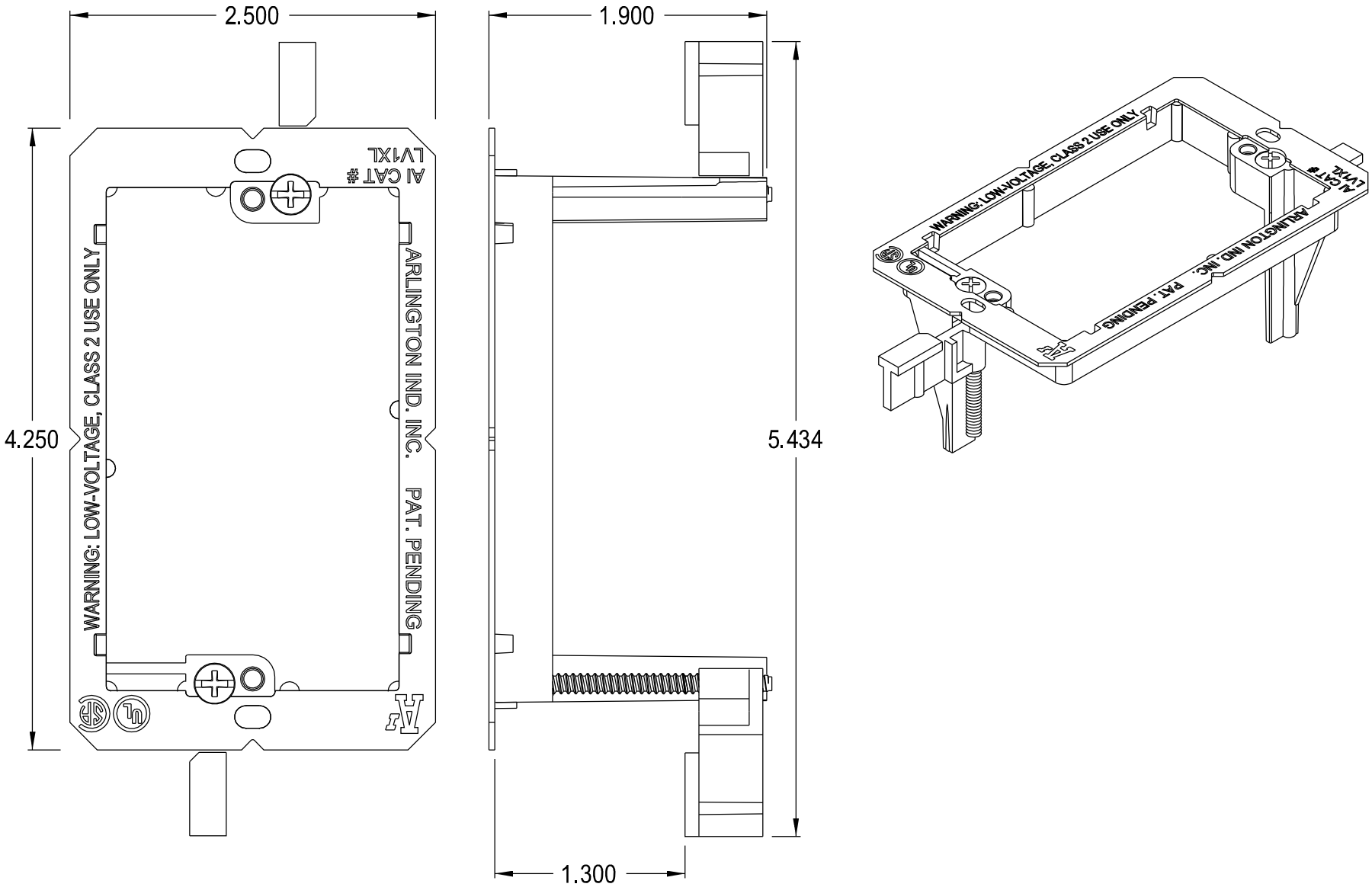
2.500
1.900
4.250
5.434
1.300
AI CAT #
LV1XL
WARNING: LOW-VOLTAGE, CLASS 2 USE ONLY
ARLINGTON IND. INC.
PAT. PENDING