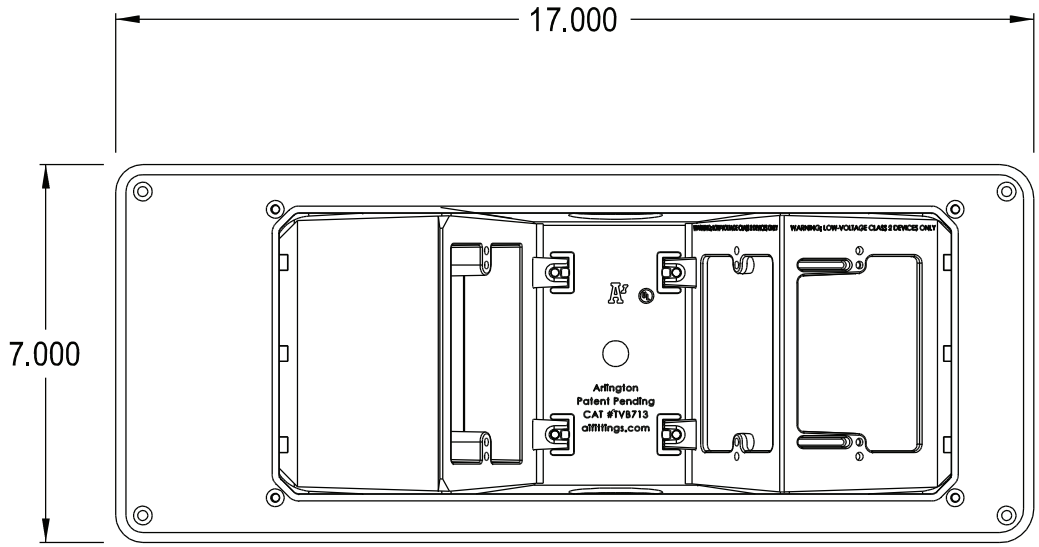
17.000
7.000
WARNING: LOW-VOLTAGE CLASS 2 DEVICES ONLY
Arlington
Patent Pending
CAT #TV8713
allfittings.com

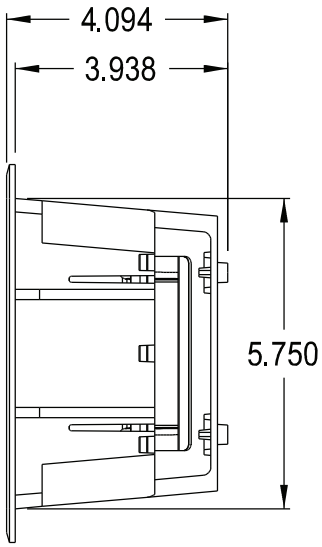
4.094
3.938
5.750

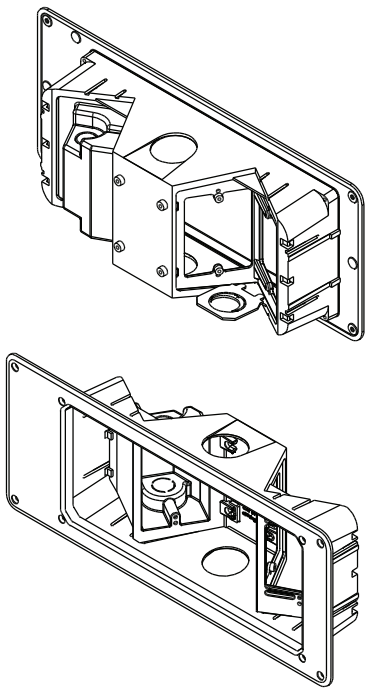

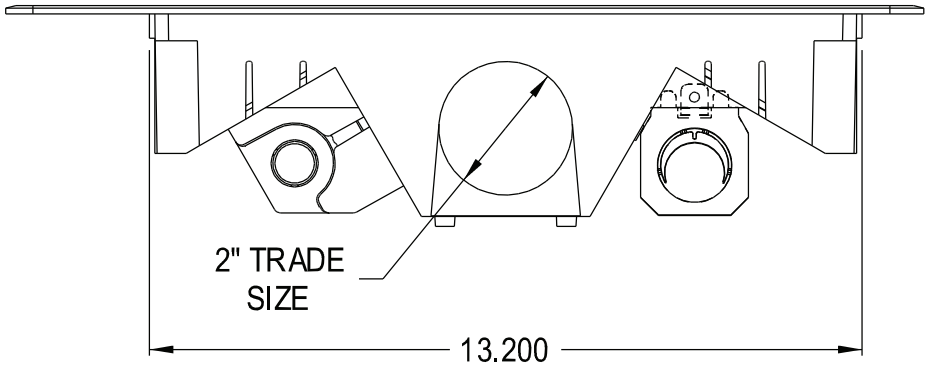
2" TRADE
SIZE
13.200