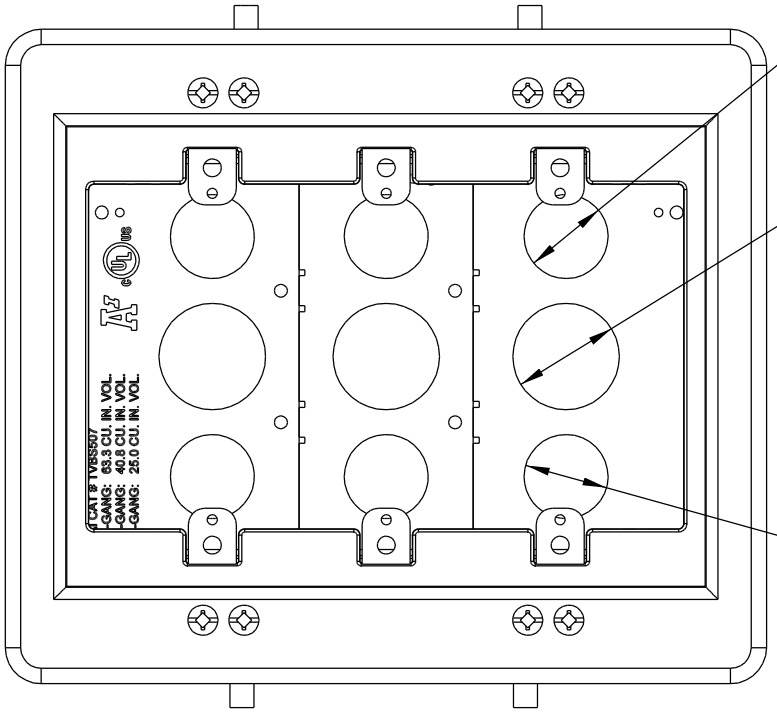

1/2" TRADE SIZE KO (TYP.)(3-PLC'S.)

3/4" TRADE SIZE KO (TYP.)(3-PLC'S.)

1/2" TRADE SIZE KO (TYP.)(3-PLC'S.)

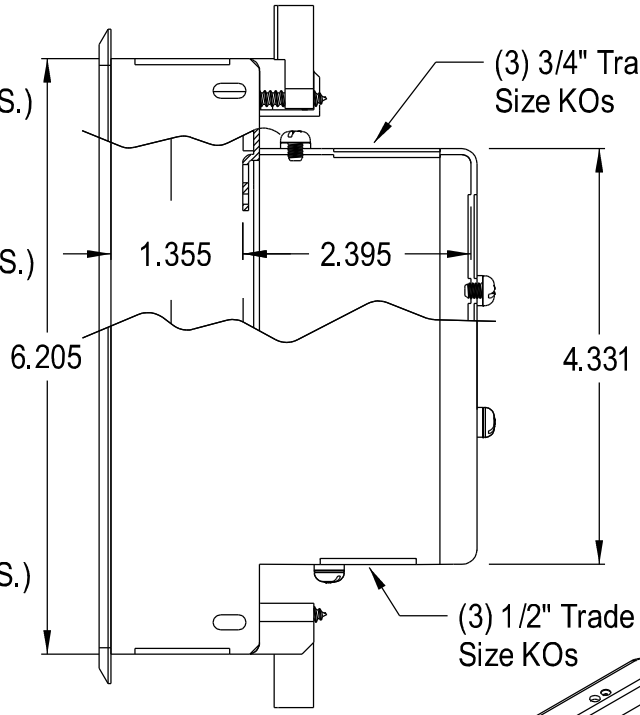

(3) 3/4" Trade Size KOs

(3) 1/2" Trade Size KOs

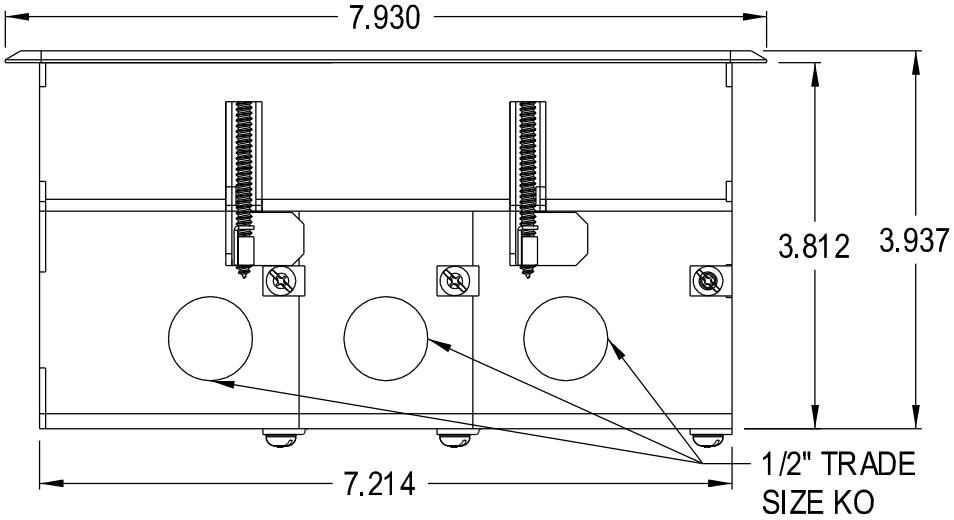

1/2" TRADE SIZE KO

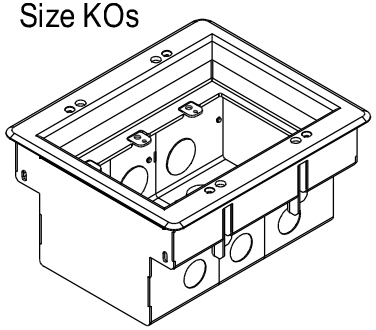

Arlington Industries, Inc.
1 Stauffer Industrial Park
Scranton, Pa 18517

TVBS507 ARTICLE DRAWING

Drawn By : Dan Nicolais	
Date : 10/7/10	Dwg. No. : TVBS507